安利消防器材有限公司
Safety Fire Fighting Equipment Ltd.
消防處註冊消防裝置承辦商 • 機電工程署註冊電業承辦商
www.FIRE.hk safety@fire.hk 香港灣仔吉安街4號地下 G/F., No. 4 Kat On Street, Wan Chai, HK 2866 6895 2866 6795

天花隱藏式緊急後備照明燈 (發光二極管)

(LED) Ceiling Concealed Type Automatic Emergency Light

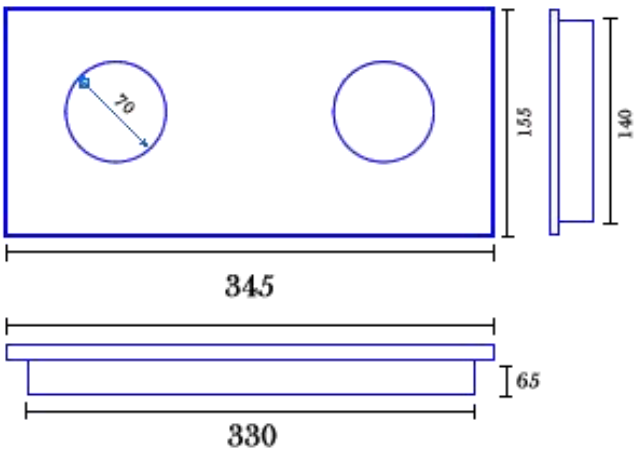

Model No. / 型號	**6V3H**
Housing / 外殼	金屬材料，外焗塗粉狀樹脂漆油 Metal materials with Epoxy Powder Coating
Rechargeable Battery / 充電池	Ni-Cd 3.6V800mAh
Normal Output / 輸出功率	1W
Inner features / 燈內裝置	防火線路版及 UL 防火電子線 Fire Resistant P.C. Board & UL Fire Resistant Wire
Outside features / 燈外裝置	紅色電源指示燈、綠色充電池指示燈、測試掣及 OFF 掣 "RED" Power indication light, "Green" re-charger battery Light, Test switch and "OFF" switch
Discharge Duration/可亮時間	Over 2 Hours
Circuit Design / 線路設計	一份低電壓斷路器，以便於充電池耗盡後將電池截斷 A low voltage cut out to disconnect the battery when fully discharged
Testing Report / 測試證書	中華電氣測試中心 China Electric Testing Centre Limited
Testing Standard / 測試標準	香港消防處牌照及審批總區: [PPA/104(A) 第四次修訂] HKFSD Licensing & Certification Command [PPA/104(A) 4th Revision]
Line Voltage / 電壓	AC 220 - 240V 50 Hz
Weight / 重量	1.4kgs
Dimension / 燈箱尺寸	Cover: 345 x 155x 1 mm Bottom: 330 x 140 x 65mm

All photos are for reference only. 圖片只供參考
All Technical Information is provided by Manufacturer. The Dealer is not held responsible for any inaccuracies in the data.